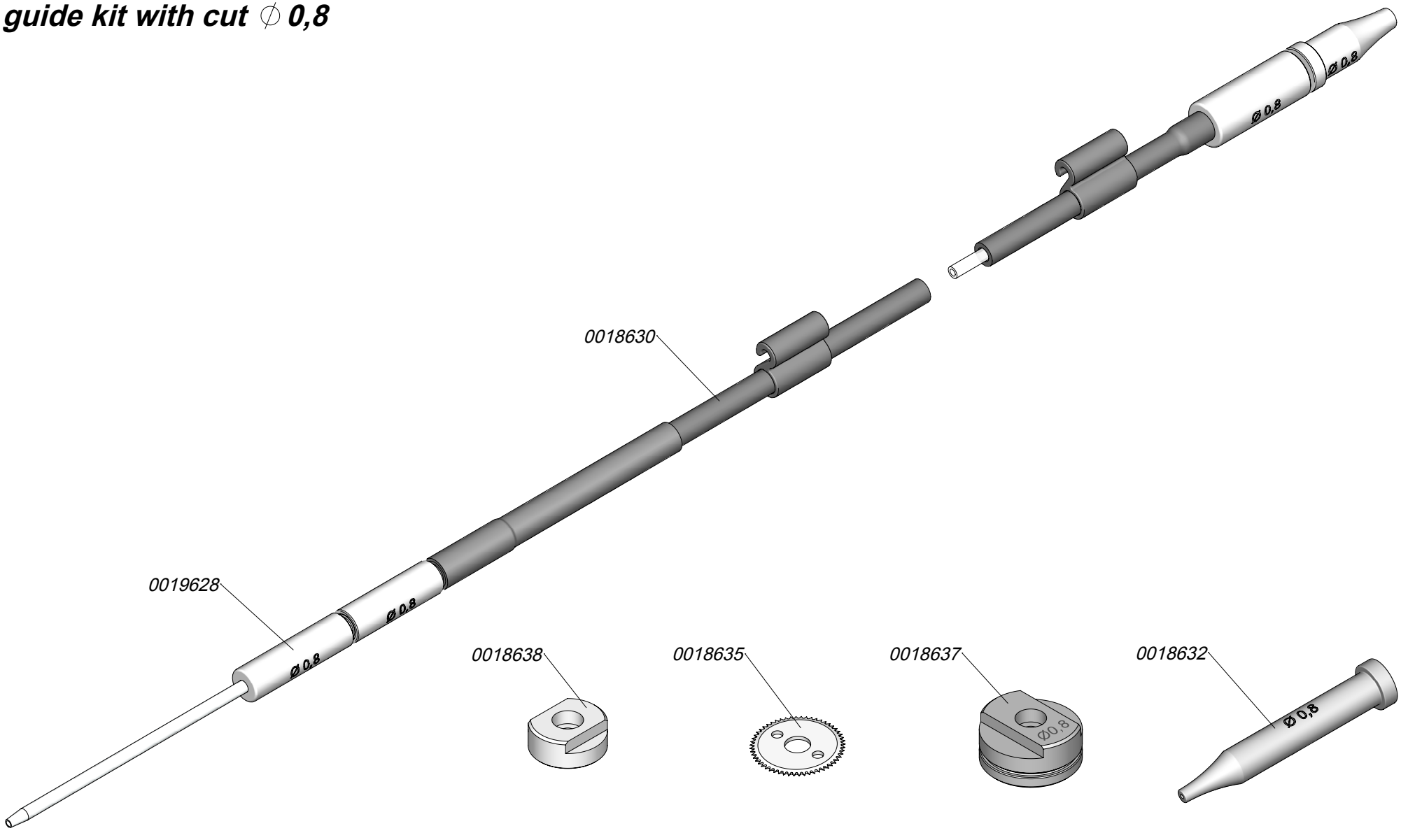GSF08V
SF guide kit with cut ∅ 0,8